Existing ROW

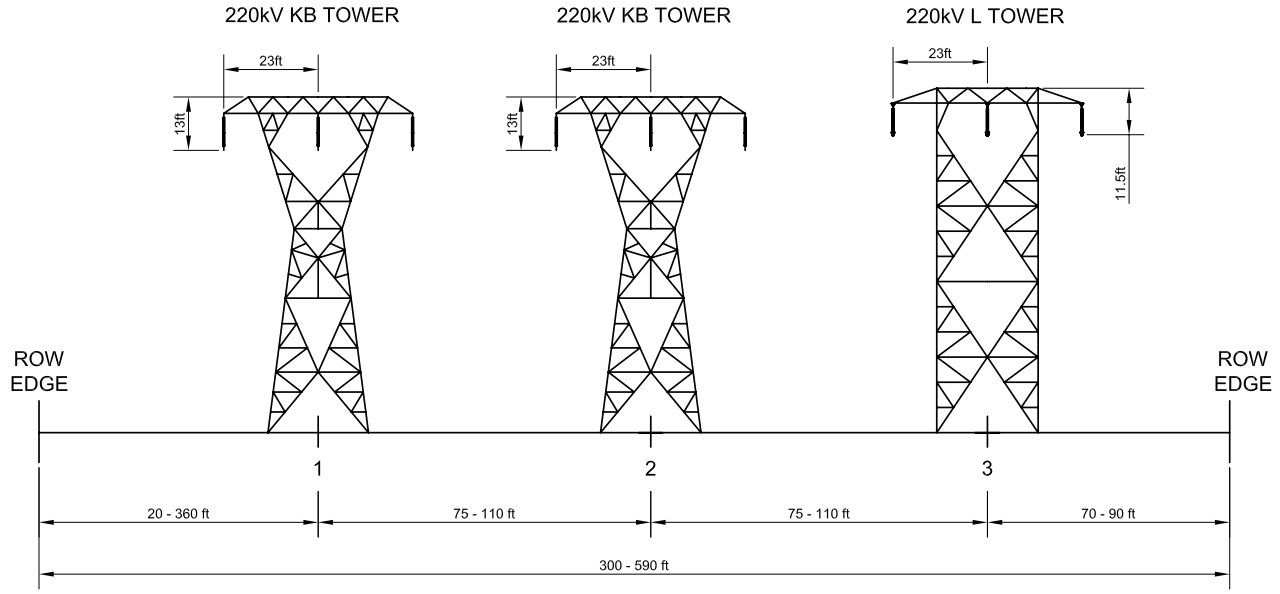

Future ROW

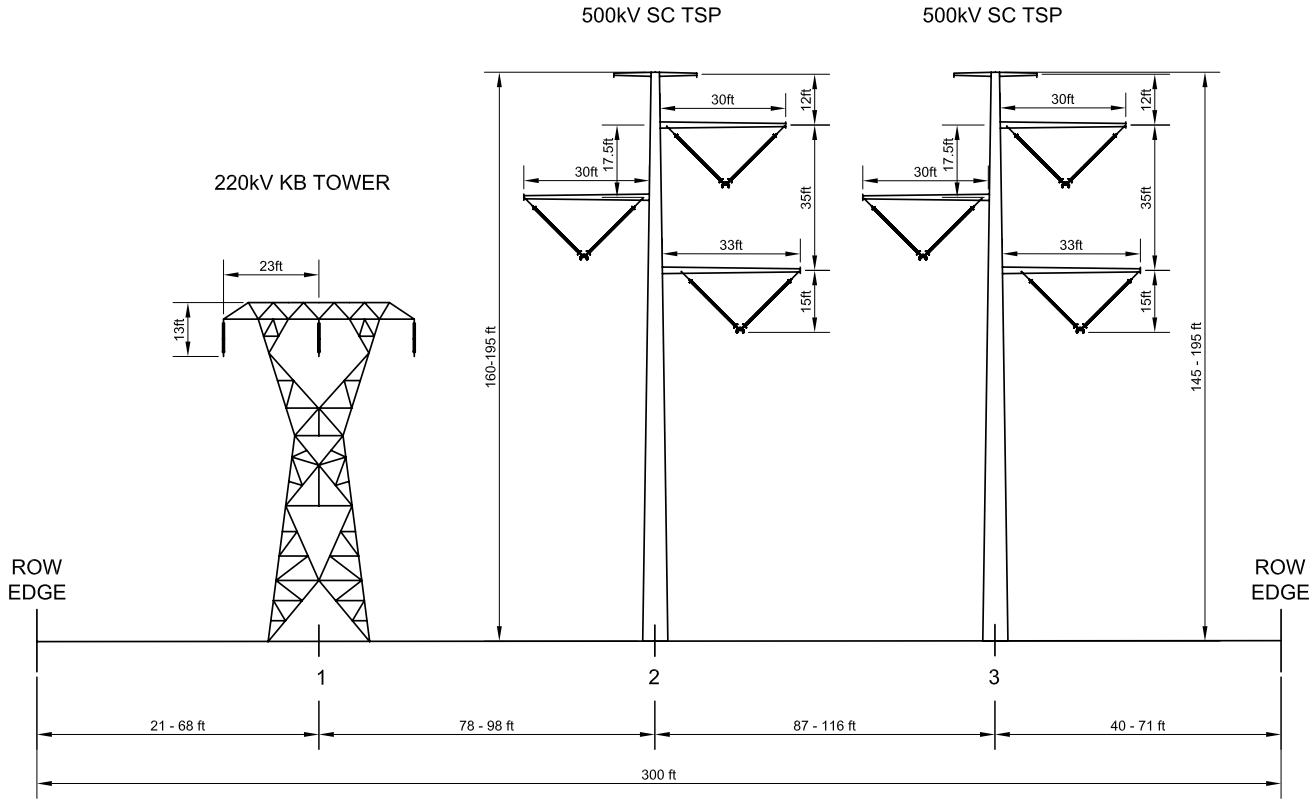

Note:
This drawing represents potential changes
between existing and future ROW cross sections.

Southern California Edison (SCE) has no indication or reason to believe that there are any inaccuracies or defects with information incorporated in this work and make no representations of any kind, including, but not limited to, the warranties of merchantability or fitness for a particular use, nor are any such warranties to be implied, with respect to the information or data, furnished herein. No part of this map may be reproduced or transmitted in any form or by any means, electronic or mechanical, including photocopying and recording system, except as expressly permitted in writing by SCE.

2007	**Tehachapi Renewable Transmission Project PEA**	Figure C-14. SEGMENT 6 R-O-W CROSS SECTION SUBSEGMENT 6.4 (S6 MP 2.45 - S6 MP 3.25)

SOUTHERN CALIFORNIA EDISON
An EDISON INTERNATIONAL℠ Company

ES022007005SCO346851.AA.05 TRTP_TS.Seg6.4.ai 6/07